Manualslib.com - The Global Manuals Library

PIONEER SA-560(BK) SERVICE MANUAL

Quick Links

Specifications
Connection Diagram

Table of Contents

PRODUCT SAFETY NOTICE
SPECIFICATIONS
FRONT PANEL
Volume Control
PHONES jack
TREBLE tone control
LOUDNESS switch
FUNCTION switches
Top View
EXPLODED VIEW
P.C.BOARDS
CONNECTION DIAGRAM
ELECTRICAL PARTS LIST
Other ManualsLib Projects

PIONEER®

Service Manual

CIRCUIT DESCRIPTIONS
REPAIR & ADJUSTMENTS



ORDER NO.
ARP-832-0

STEREO AMPLIFIER

SA-560(BK)
SA-560

MODEL SA-560 [BK] COMES IN SIX VERSIONS DISTINGUISHED AS FOLLOWS;

Type	Applicable model		Power requirement	Destination
	SA-560 [BK]	SA-560		
HE	○	○	AC220V, 240V (switchable)	European continent
HB	○	○	AC240V, 220V (switchable)	United Kingdom
S	○	○	AC110V, 120V, 220V, 240V (Switchable)	General export
KC	○	–	AC120V only	Canada
HEZ	○	○	AC220V 240V (switchable)	West Germany
YP	○	–	AC240V only	Australia

- **This service manual is applicable to the HE, HB and S types.**
  As to the KC, HEZ, YP types, please refer to the additional service manual (ARP-833).
- **As to the HB, S types, please see page 22.**
- **SA-560 [BK] is the same as the SA-560 except for the exterior design (color).**

CONTENTS

1. SAFETY INFORMATION 2
2. SPECIFICATIONS 3
3. FRONT PANEL FACILITIES 4
4. PARTS LOCATION 6
5. PACKING 7
6. EXPLODED VIEW 8
7. BLOCK DIAGRAM 11
8. SCHEMATIC DIAGRAM 12
9. P.C. BOARDS CONNECTION DIAGRAM 18
10. ELECTRICAL PARTS LIST 20
11. FOR HB, S TYPES 22

PIONEER ELECTRONIC CORPORATION 4-1, Meguro 1-Chome, Meguro-ku, Tokyo 153, Japan
PIONEER ELECTRONICS (USA) INC. P.O. Box 1760, Long Beach, California 90801 U.S.A.
TEL: (800) 421-1404, (800) 237-0424
PIONEER ELECTRONIC (EUROPE) N.V. Keetberglaan 1, 2740 Beveren, Belgium TEL: 03/775-28-08
PIONEER ELECTRONICS AUSTRALIA PTY. LTD. 178-184 Boundary Road, Braeside, Victoria 3195, Australia
TEL: (03) 580-9911

YA © MAY, 1985 Printed in Japan

1. SAFETY INFORMATION

1. SAFETY PRECAUTIONS

The following check should be performed for the continued protection of the customer and service technician.

LEAKAGE CURRENT CHECK

Measure leakage current to a known earth ground (water pipe, conduit, etc.) by connecting a leakage current tester such as Simpson Model 229-2 or equivalent between the earth ground and all exposed metal parts of the appliance (input/output terminals, screwheads, metal overlays, control shaft, etc.). Plug the AC line cord of the appliance directly into a 120V AC 60Hz outlet and turn the AC power switch on. Any current measured must not exceed 0.5mA.

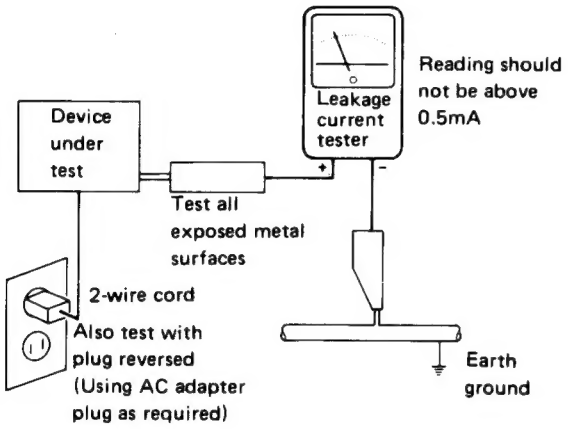

AC Leakage Test

ANY MEASUREMENTS NOT WITHIN THE LIMITS OUTLINED ABOVE ARE INDICATIVE OF A POTENTIAL SHOCK HAZARD AND MUST BE CORRECTED BEFORE RETURNING THE APPLIANCE TO THE CUSTOMER.

2. PRODUCT SAFETY NOTICE

Many electrical and mechanical parts in the appliance have special safety related characteristics. These are often not evident from visual inspection nor the protection afforded by them necessarily can be obtained by using replacement components rated for voltage, wattage, etc. Replacement parts which have these special safety characteristics are identified in this Service Manual.

Electrical components having such features are identified by marking with a ⚠ on the schematics and on the parts list in this Service Manual.

The use of a substitute replacement component which dose not have the same safety characteristics as the PIONEER recommended replacement one, shown in the parts list in this Service Manual, may create shock, fire, or other hazards.

Product Safety is continuously under review and new instructions are issued from time to time. For the latest information, always consult the current PIONEER Service Manual. A subscription to, or additional copies of, PIONEER Service Manual may be obtained at a nominal charge from PIONEER.

2. SPECIFICATIONS

Amplifier Section

Continuous average power output is 30 watts* per channel, min., at 8 ohms from 40 Hertz to 20,000 Hertz with no more than 0.5% total harmonic distortion.

Continuous Power Output (both channels driven)
- T.H.D. 0.5%, 1 kHz, 8 Ω ..... 40 W per channel
- T.H.D. 0.5%, 20 Hz to 20 kHz, 8 Ω ..... 30 W per channel

DIN, Continuous Power Output at 1 kHz (both channels driven)
- T.H.D. 1%, 1 kHz, 8 Ω ..... 40 W per channel

Input (Sensitivity/Impedance)
- PHONO ..... 2.5 mV/50 kΩ
- TUNER, TAPE PLAY ADAPTOR IN ..... 150 mV/50 kΩ

Phono Overload Level (T.H.D. 0.1%, 1 kHz)
..... 150 mV

Output (Level/Impedance)
- Headphone ..... 67 mV/8 Ω

Frequency Response
- PHONO (RIAA Equalization)
  ..... 20 Hz to 20 kHz ±0.5 dB
- TUNER, ADAPTOR IN, TAPE PLAY
  ..... 20 Hz to 70 kHz $^{+2}_{-3}$ dB

Tone Control
- BASS ..... ±10 dB (100 Hz)
- TREBLE ..... ±10 dB (10 kHz)

Loudness Contour(Volume control set at −40 dB position)
- 100 Hz ..... +6 dB
- 10 kHz ..... +3 dB

Hum and Noise (IHF, short circuited, A network)
- PHONO ..... 72 dB
- ADAPTOR IN, TUNER, TAPE PLAY ..... 98 dB

Hum and Noise (DIN, continuous power / 50 mW)
- PHONO ..... 68 dB/60 dB
- ADAPTOR IN, TUNER, TAPE PLAY ..... 82 dB/62 dB

Speaker Load Impedance
- A or B ..... 6 — 16 Ω
- A + B ..... 6 — 16 Ω

Miscellaneous

Power Requirements
- HE model ..... a.c. 220 V ∿, 50/60 Hz
- HB, YP models ..... a.c. 240 V ∿, 50/60 Hz
- S, S/G models ..... ∿AC 110 V/120 V/220 V/240 V (switchable), 50/60 Hz
- KU, KC models ..... AC 120 V, 60 Hz

Power Consumption
- HE model ..... 240 W
- HB, YP models ..... 240 W
- S, S/G models ..... 100 W
- KC model ..... 150 W (CSA)

Dimensions ..... 420 (W) x 98 (H) x 230 (D) mm
16-1/2 (W) x 3-7/8 (H) x 9-1/8 (D) in

Weight (without package) ..... 4 kg (8 lb 13 oz)

Furnished Parts

Operating Instructions 1

NOTE:
- *Specifications and design subject to possible modification without notice due to improvements.*
- **Measured pursuant to the Federal Trade Commission's Trade Regulation rule on Power Claims for Amplifier.*

3. FRONT PANEL FACILITIES

FRONT PANEL

Indications on the actual unit may differ from those in the illustration. However, operating procedures are the same.

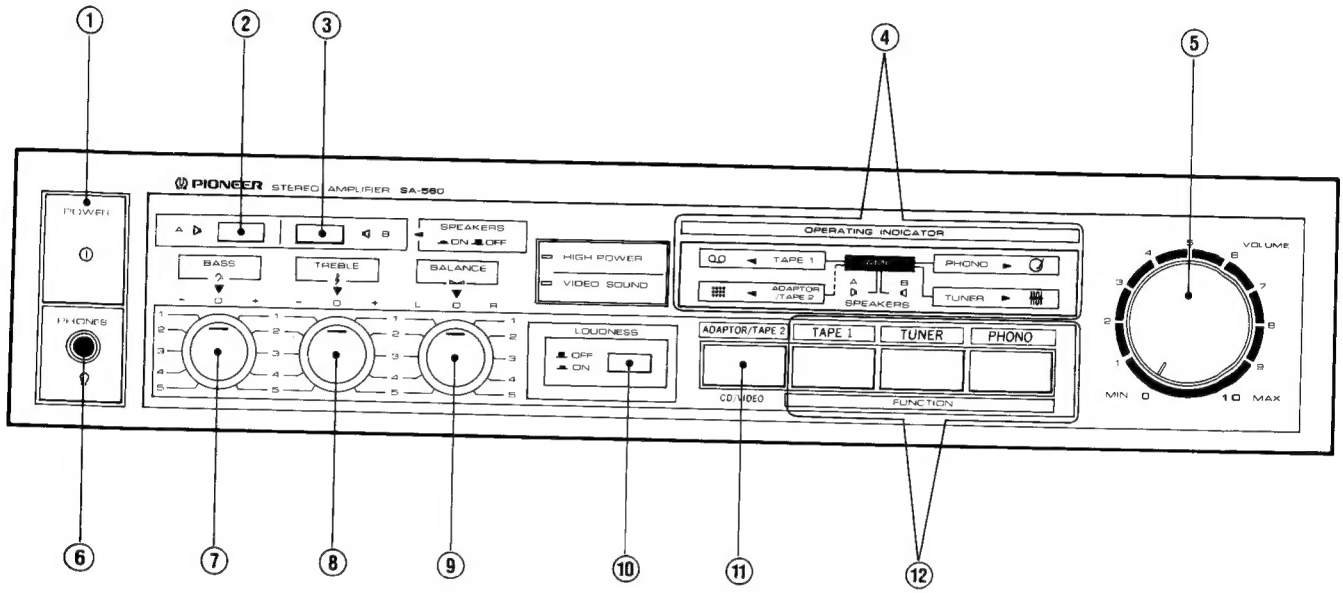

① POWER switch

Press to turn power to the unit ON and OFF.
Depressed position (ON):
Power is supplied to the unit.
Released position (OFF):
Power to the unit is disconnected.

② SPEAKERS A selector switch

Use this switch to listen to the speaker systems connected to the SPEAKERS A terminals.
[ON] — Depressd position: Sound is heard from speaker systems.
[OFF] — Released position: No sound is heard from speaker systems. Set to this position when listening with headphones.

③ SPEAKERS B selector switch

Use this switch to listen to the speaker systems connected to the SPEAKERS B terminals.
[ON] — Depressed position: Sound is heard from the speaker systems.
[OFF] — Released position: No sound is heard from the speaker systems. Set to this position when listening with headphones.

④ Indicators

The indicators light to show the positions of the FUNCTION switches and ADAPTOR/TAPE2 switch.

⑤ VOLUME control

Use to adjust volume level.

⑥ PHONES jack

When using headphones, insert their plug into this jack.

⑦ BASS tone control

Use to adjust the low-frequency tone. The central "0" position is the flat (normal) position. When turned to the right, low-frequency tones are emphasized; when turned to the left, low-frequency tones are de-emphasized.

⑧ TREBLE tone control

Use to adjust the high-frequency tone.
The central "0" position is the flat (normal) position. When turned to the right, high-frequency tones are emphasized; when turned to the left, high-frequency tones are de-emphasized.

⑨ BALANCE control

Should normally be left in the center position. Adjust balance if the sound is louder from one of the speakers. If the right side is louder, turn toward the left position and if the left side is louder, turn toward the right position.

⑩ LOUDNESS switch

Use when listening at low volume levels.
[OFF] — Released position: Should normally be left in this position.
[ON] — Depressed position: Boosts low and high frequencies to give added punch to playback even at low volume.

⑪ ADAPTOR/TAPE2(/CD/VIDEO) switch

Use when there is an adaptor component (graphic equalizer, etc.), compact disc player, video cassette recorder or tape deck connected to the ADAPTOR/TAPE 2 terminals.
[OFF] — ADAPTOR/TAPE2 indicator goes out: When not in use.
[ON] — ADAPTOR/TAPE2 indicator lights: When using the adaptor component or listening to the component connected to the ADAPTOR/TAPE2 terminals.

NOTE:
When no connections are made to the ADAPTOR/TAPE 2 terminals, or when they are not in use, be sure to set this switch to the OFF position. (No sound will be heard if it is set to the ON position.)

⑫ FUNCTION switches

Use to select playback source.
[PHONO] — Press when listening to record playback on a turntable.
[TUNER] — Press when listening to AM or FM broadcasts with a tuner.
[TAPE 1] — Press when listening to tape playback with a tape deck.

NOTE:
Function switches should be pressed firmly; otherwise, all the function indicators will light, and no output will be produced. If this occurs, press the desired function switch again.

4. PARTS LOCATION

NOTES:

- *Parts without part number cannot be supplied.*
- *The ⚠ mark found on some component parts indicates the importance of the safety factor of the part. Therefore, when replacing, be sure to use parts of identical designation.*
- *For your Parts Stock Control, the fast moving items are indicated with the marks ★★ and ★.*
  ★★ GENERALLY MOVES FASTER THAN ★.
  This classification shall be adjusted by each distributor because it depends on model number, temperature, humidity, etc.

Front Panel View

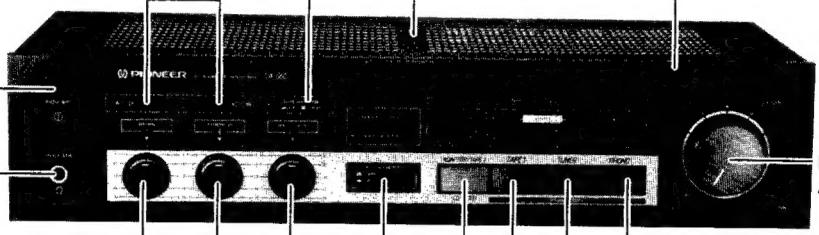

Sheet panel
ANZ-009 (BLACK)
ANZ-148 (BLACK, S type only)
ANZ-010 (SILVER)

Bonnet case
ANE-554 (Black)
ANE-555 (Silver)

Front panel
ANM-913 (Black)
ANM-914 (Silver)

Push knob (SPEAKERS)
AAY-161

Power knob
AAY-128

Headphones panel
AEP-241

Rotary knob (BASS)
AAB-414

Rotary knob (TREBLE)
AAB-414

Rotary knob (BALANCE)
AAB-414

Push knob (LOUDNESS)
AAY-161

Rotary knob (L) (VOLUME)
AAB-413

Function knob (PHONO)
AAY-127

Function knob (TUNER)
AAY-127

Function knob (TAPE1)
AAY-127

Function knob (ADAPTOR/TAPE2)
AAY-127

Rear Panel View

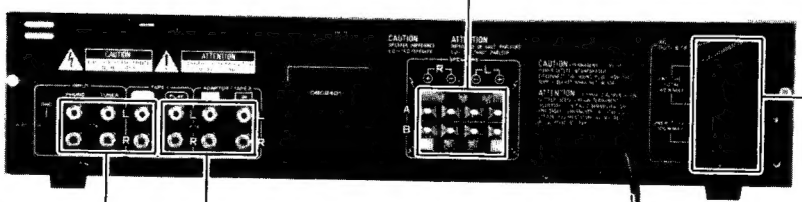

Terminal (SPEAKER)
AKE-102

⚠AC socket (3P)
AKP-502

Terminal (PHONO, TUNER, TAPE1, TAPE2)
AKB-095

⚠AC power cord
ADG-068

Top View

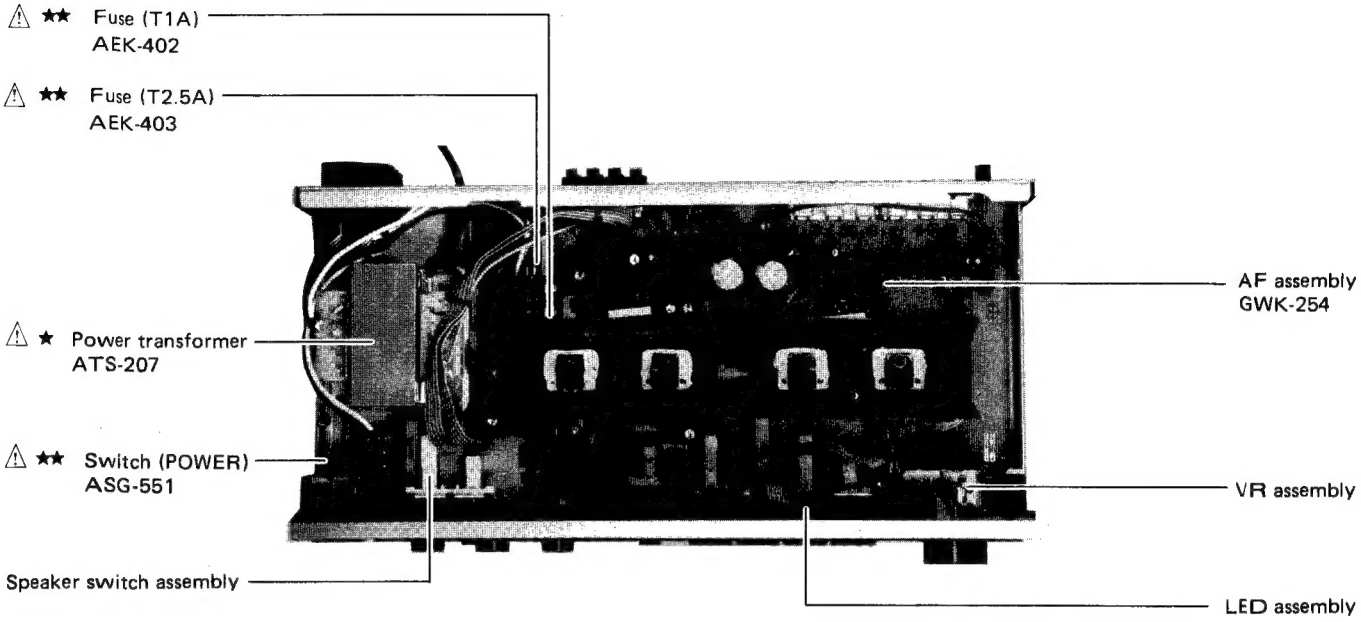

5. PACKING

Mark	No.	Part No.	Description
	1	AHA-340	Front rear pad
	2	AHE-529	Packing case (Black)
		AHE-530	Packing case (Silver)
	3	ARE-132	Operating instructions
	4	AHG-131	Polyethylene sheet
	5	AEA-057	Cable

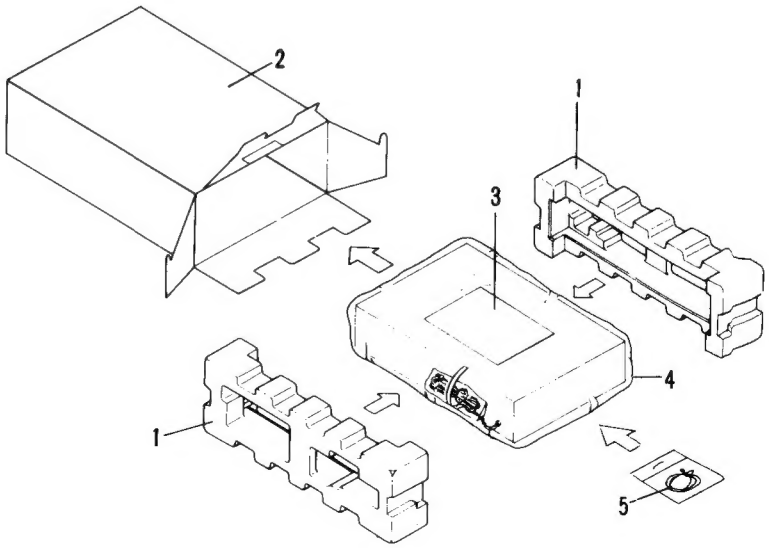

6. EXPLODED VIEW

- *Parts without part number cannot be supplied.*
- *The ⚠ mark found on some component parts indicates the importance of the safety factor of the part. Therefore, when replacing, be sure to use parts of identical designation.*
- *For your Parts Stock Control, the fast moving items are indicated with the marks ★★ and ★.*
  ★★ GENERALLY MOVES FASTER THAN ★.
  This classification shall be adjusted by each distributor because it depends on model number, temperature, humidity, etc.

Mark	No.	Part No.	Description
	1	GWK-254	AF assembly
⚠ ★	2	ATS-207	Power transformer (AC220V/240V)
⚠	3	AKP-502	AC socket (3P)
⚠ ★★	4	AEK-402	FU1 Fuse (T1A)
⚠ ★★	5	AEK-403	FU2 Fuse (T2.5A)
	6	AEC-784	Leg assembly
	7	AAB-413	Rotary knob L (VOLUME)
	8	AAB-414	Rotary knob M
	9	AAY-127	Function knob
	10	AAY-128	Power knob
	11	AAY-161	Push knob
	12	AEP-241	Headphones panel
	13	ANE-554	Bonnet case (Black)
		ANE-555	Bonnet case (Silver)
	14	ANM-913	Front panel (Black)
		ANM-914	Front panel (Silver)
	15	ANR-993	Panel base
	16	ANZ-009	Sheet panel (Black)
		ANZ-148	Sheet panel (Black, S type only)
		ANZ-010	Sheet panel (Silver)
	17	ABH-041	Coil spring
	18	ABH-155	Coil spring
	19	ABN-093	Nut
⚠	20	ADG-068	AC power cord
	21	BBZ30P080FZK	Screw (3 x 8)
	22	NK70FUC	Nut
	23	NK90FUC	Nut
	24	VMZ30P060FMC	Screw (3 x 6)
	25	AEC-818	Mica wafer
⚠ ★★	26	ASG-551	Push switch (POWER)
⚠	27	ACG-502	Ceramic capacitor (C1)
	28	AEC-294	Condenser cover
	29	ABA-258	Screw

Mark	No.	Part No.	Description
	102		Headphone assembly
	103		Speaker switch assembly
	104		LED assembly
	105		Volume assembly
	106		Bottom plate
	107		Trans frame
	108		Right frame
	109		Heat sink
	110		Rear panel
	111		P.C.B. holder

7. BLOC

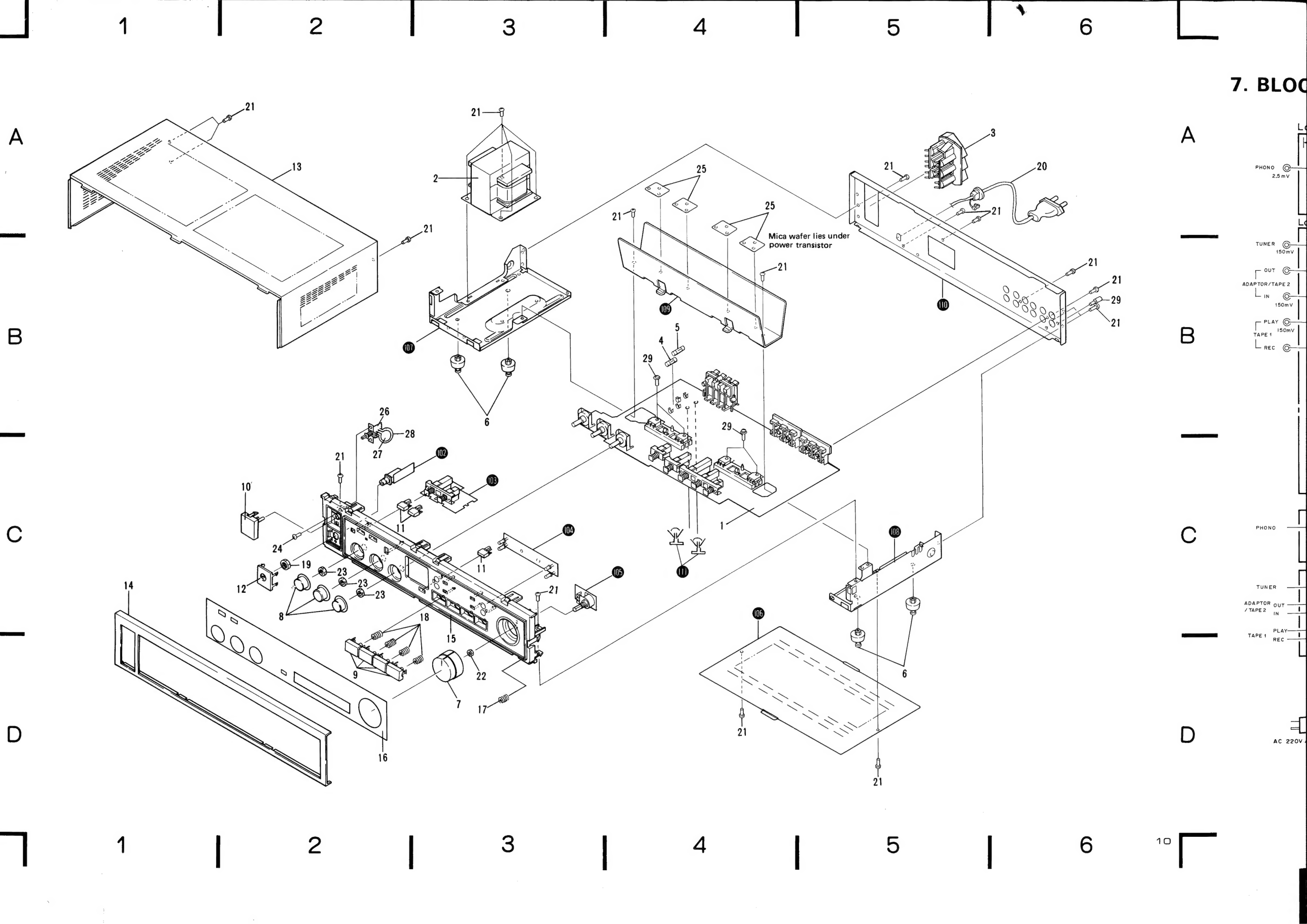

Mica wafer lies under power transistor
PHONO 2.5mV
TUNER 150mV
OUT
ADAPTOR/TAPE 2
IN 150mV
PLAY 150mV
TAPE 1
REC
PHONO
TUNER
ADAPTOR / TAPE 2
OUT
IN
PLAY
TAPE 1
REC
AC 220V

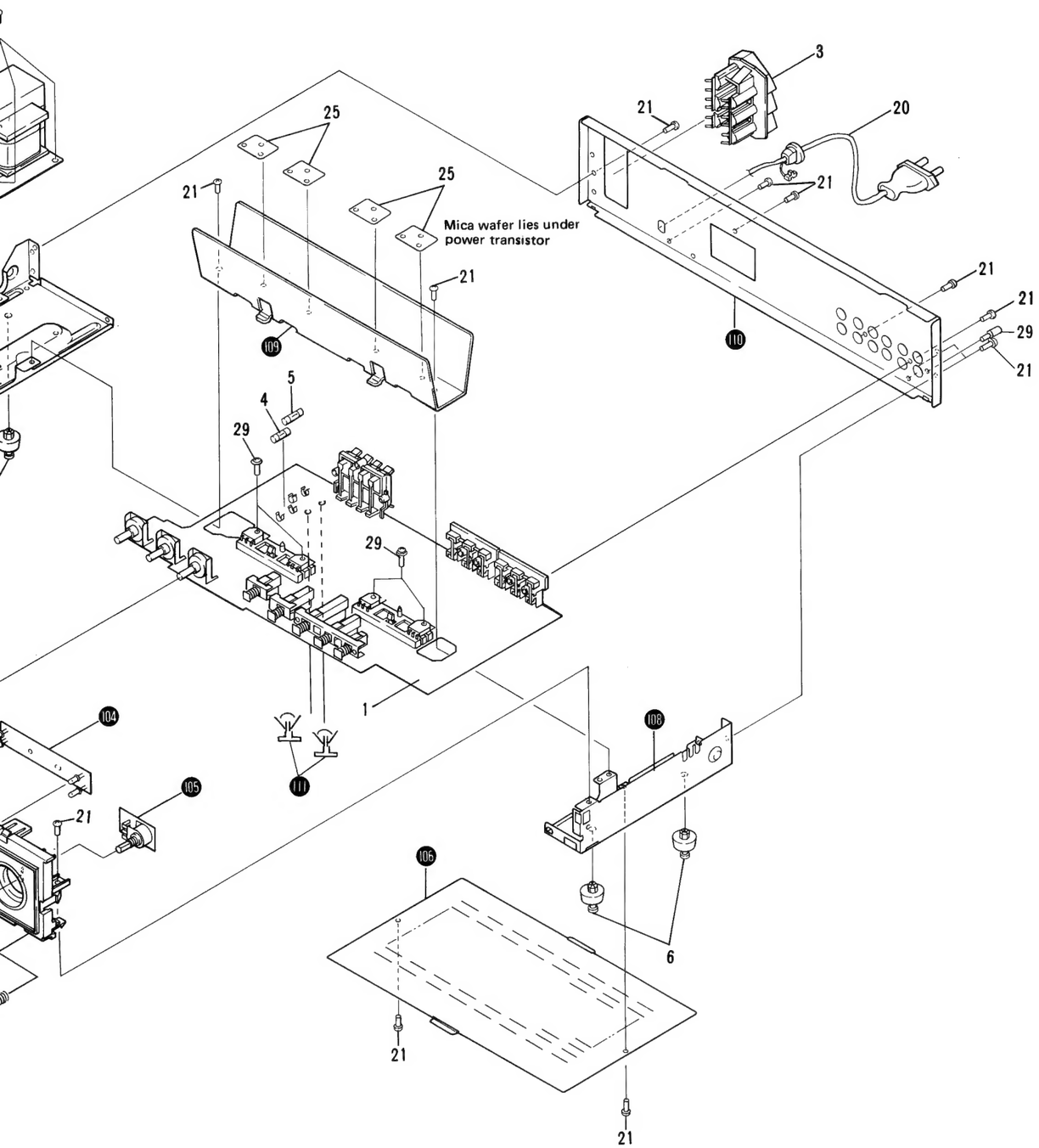

7. BLOCK DIAGRAM

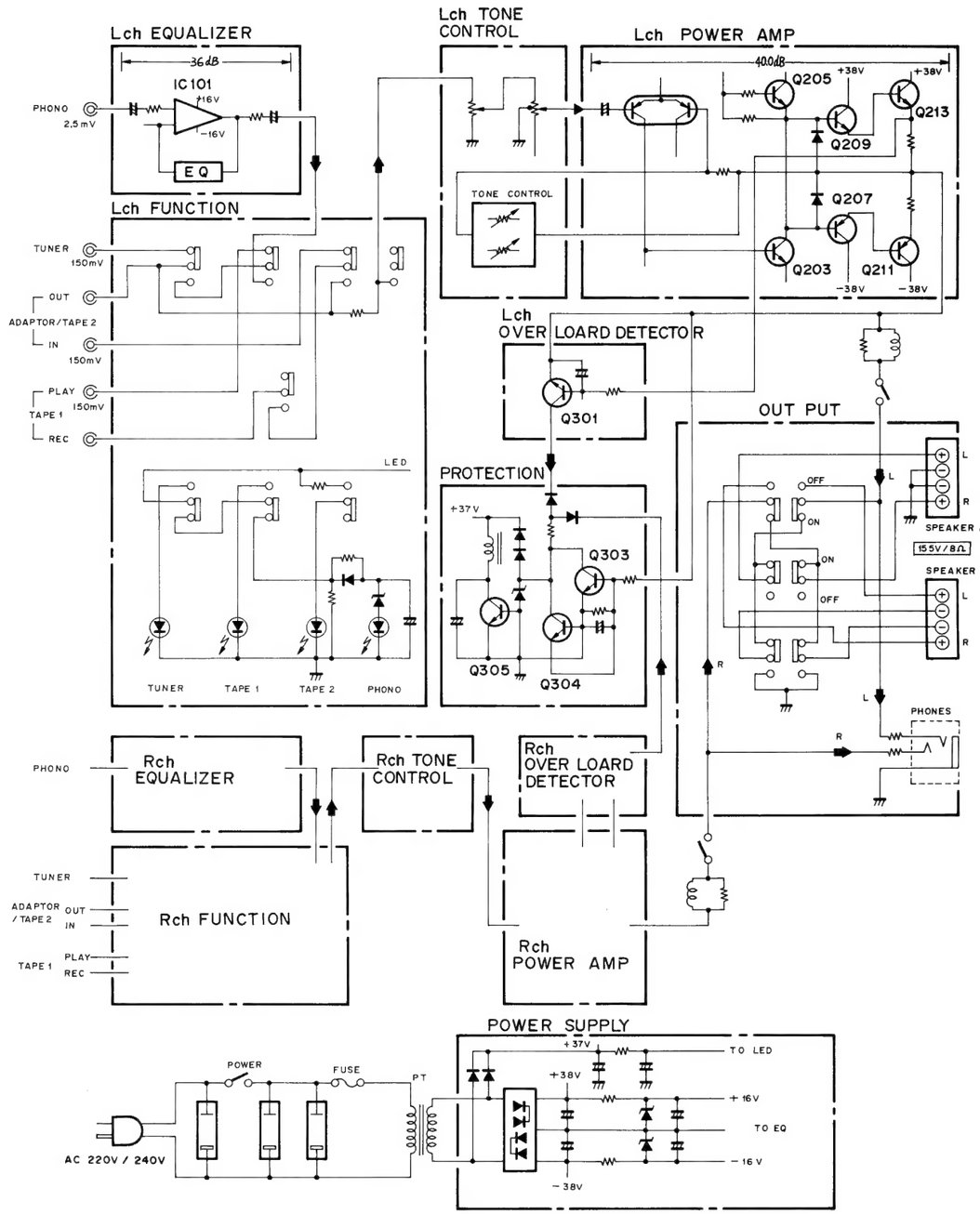

8. SCHEMATIC DIAGRAM

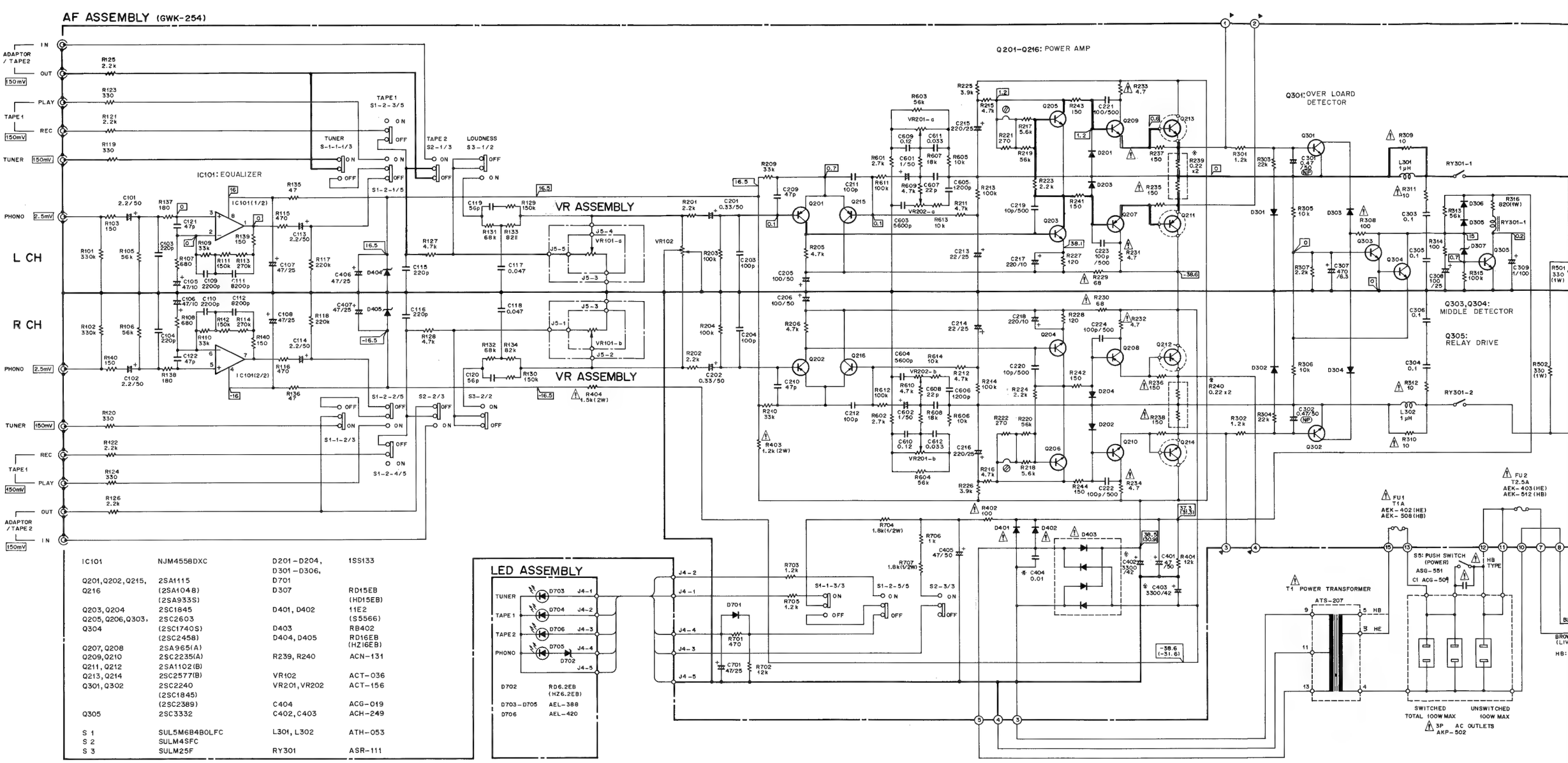

IC101	NJM4558DXC	D201-D204, D301-D306,	1SS133
Q201, Q202, Q215,	2SA1115	D701	
Q216	(2SA1048) (2SA933S)	D307	RD15EB (HD15EB)
Q203, Q204	2SC1845	D401, D402	11E2 (S5566)
Q205, Q206, Q303,	2SC2603		
Q304	(2SC1740S) (2SC2458)	D403	RB402
		D404, D405	RD16EB (HZ16EB)
Q207, Q208	2SA965(A)		
Q209, Q210	2SC2235(A)	R239, R240	ACN-131
Q211, Q212	2SA1102(B)		
Q213, Q214	2SC2577(B)	VR102	ACT-036
Q301, Q302	2SC2240 (2SC1845) (2SC2389)	VR201, VR202	ACT-156
		C404	ACG-019
Q305	2SC3332	C402, C403	ACH-249
S 1	SUL5M6B4B0LFC	L301, L302	ATH-053
S 2	SULM4SFC		
S 3	SULM25F	RY301	ASR-111
D702	RD6.2EB (HZ6.2EB)		
D703-D705	AEL-388		
D706	AEL-420		

NOTE:
The indicated semiconductors are representative ones only. Other alternative semiconductors may be used and are listed in the parts list.

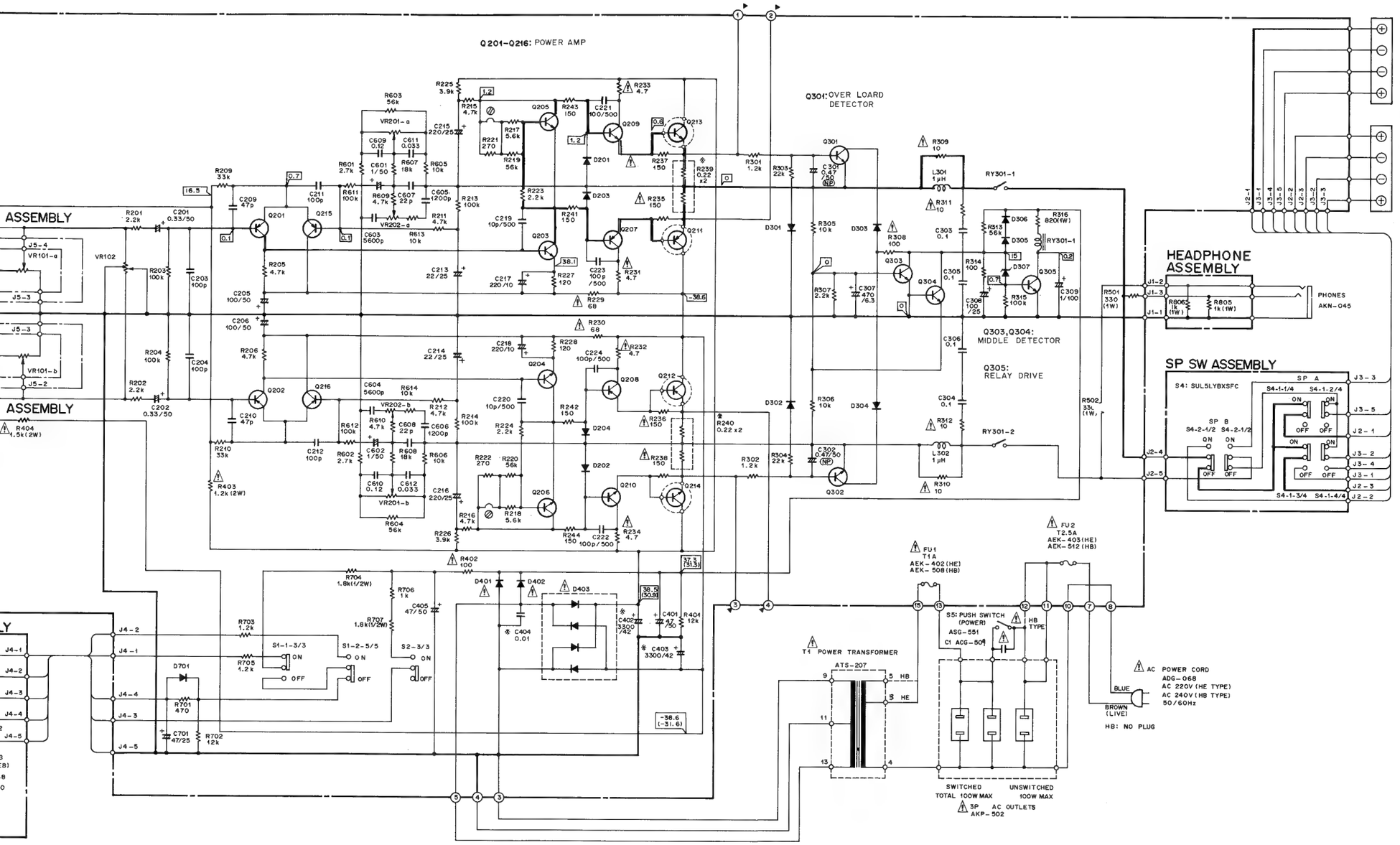

1. RESISTORS:
   Indicated in Ω, 1/4W, and 1/8W, ±5% tolerance unless otherwise noted k; kΩ, M; MΩ, (F); ±1%, (G); ±2%, (K); ±10%, (M); ±20% tolerance
2. CAPACITORS:
   Indicated in capacity (μF)/voltage (V) unless otherwise noted p; pF. Indication without voltage is 50V except electrolytic capacitor.
3. VOLTAGE, CURRENT:
   V: Signal voltage at W + W, 8Ω output (1 kHz)
   : DC voltage (V) at no input signal Value in ( ) is DC voltage at rated power.
4. OTHERS:
   : Signal route.
   : Adjusting point.
   The ⚠ mark found on some component parts indicates the importance of the safety factor of the part. Therefore, when replacing, be sure to use parts of identical designation.
   ※ marked capacitors and resistors have parts unmbers.
   The underlined indicates the switch position.

   This is the basic schematic diagram, but the actual circuit may vary due to improvements in design.
5. SWITCHES:

SI-I FUNCTION(TUNER)	ON-OFF
SI-2FUNCTION(TAPE 1)	ON-OFF
S2 FUNCTION(TAPE 2/ADAPTOR)	ON-OFF
S3 LOUDNESS	ON-OFF
S4-1 SPEAKERS A	ON-OFF
S4-2 SPEAKERS B	ON-OFF
S5 POWER	ON-OFF

THE UNDERLINED INDICATES THE SWITCH POSITION

Line voltage selection (HE, HB TYPES)

Line voltage can be changed with following steps.

1. Descomment the AC power cord.
2. Remove the top cover.
3. Change the connection wire (To Power transformer) of Terminal No. 3 (VIOLET) as follows.

Voltage	Terminal No. 3	Terminal No. 5
220V	Violet	.....
240V	.....	Violet

4. Stick the voltage level on the rear panel.

Part No.	Description
AAX-193	220V level
AAX-192	240V level

9. P.C.BOARDS CONNECTION DIAGRAM

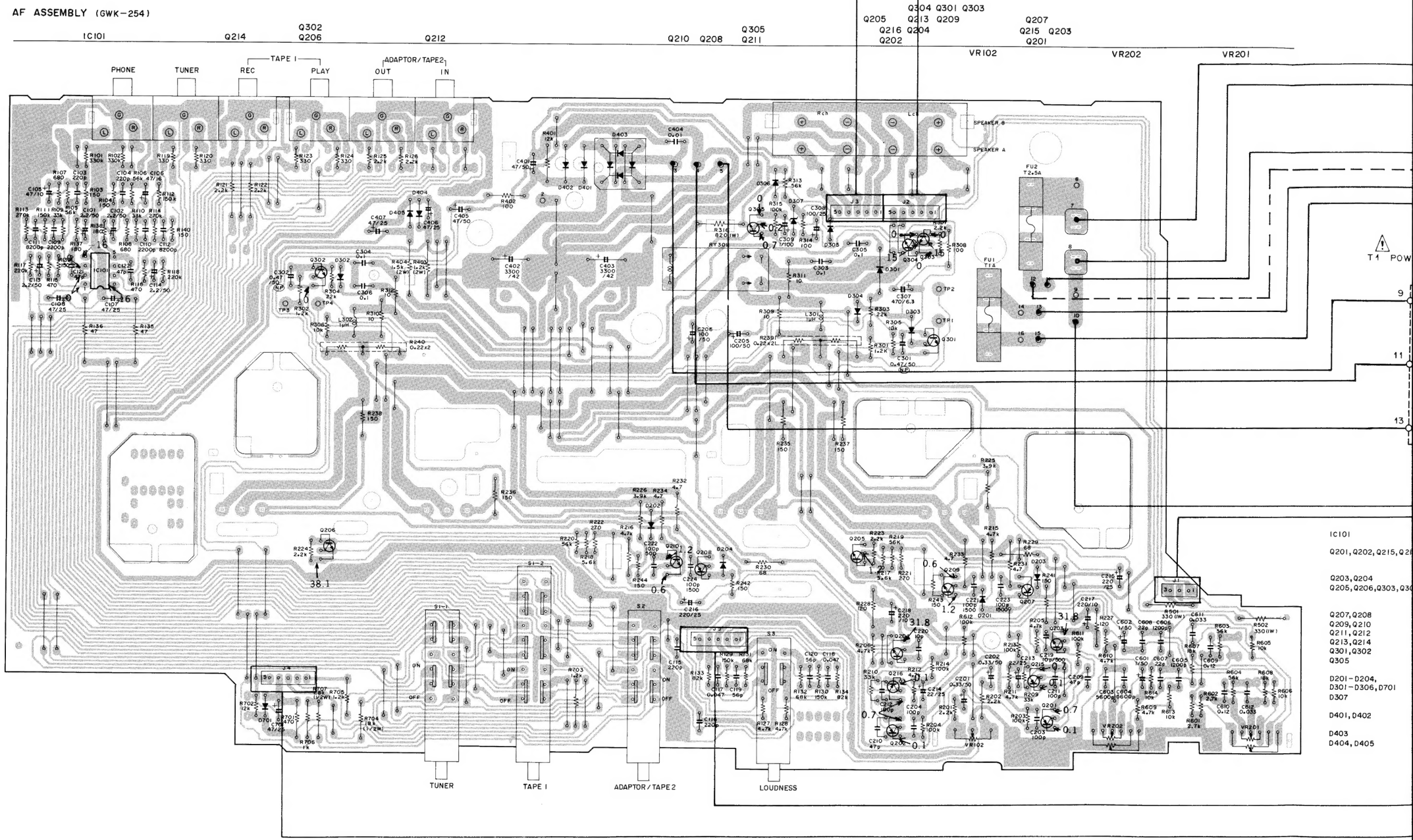

6 7 8 9 10 11 12

A

B

C

D

⚠ AC POWER CORD
ADG-068 (HE TYPE)
ADG-063 (HB TYPE)
AC 220V
AC 240V
50/60Hz

BLUE
BROWN (LIVE)

HB: NO PLUG

VR201

T1 POWER TRANSFORMER
ATS-207

9
5 HB
3 HE
11
13
4

S5: PUSH SWITCH (POWER)
ASG-551
C1 ACG-509
HB TYPE

SWITCHED
TOTAL 100W MAX

UNSWITCHED
100W MAX

⚠ 3P AC OUTLETS
AKP-502

SP SW ASSEMBLY

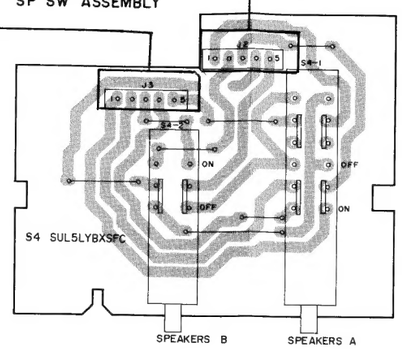

S4 SUL5LYBXSFC

SPEAKERS B
SPEAKERS A

LED ASSEMBLY

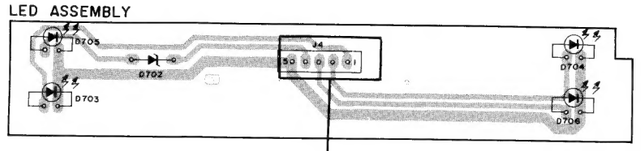

D702	RD6.2EB (HZ6.2EB)
D703, D704, D705 D706	AEL-388 AEL-420

IC101	NJM4558DXC
Q201, Q202, Q215, Q216	2SA1115 (2SA1048) (2SA933S)
Q203, Q204 Q205, Q206, Q303, Q304	2SC1845 2SC2603 (2SC1740S) (2SC2458)
Q207, Q208 Q209, Q210 Q211, Q212 Q213, Q214 Q301, Q302 Q305	2SA965 (A) 2SC2235 (A) 2SA1102 (B) 2SC2577 (B) 2SC2240 2SC3332
D201-D204, D301-D306, D701	ISS131
D307	RD15EB (HZ15EB)
D401, D402	11E2 (S5566)
D403	RB402
D404, D405	RD16EB (HZ16EB)

HEADPHONE ASSEMBLY

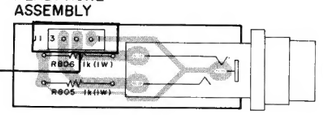

PHONES

VR ASSEMBLY

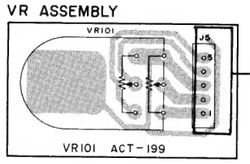

7 8 9 10 11 12

External Appearances of Transistor and ICs

2SA1115
2SC2603

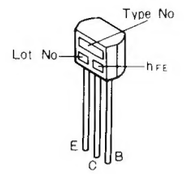

2SA965 (A)
2SC2235 (A)

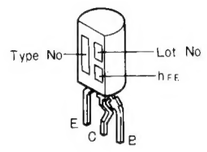

2SC2240
2SC2389

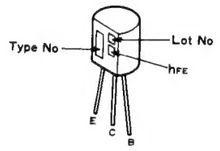

2SC3332

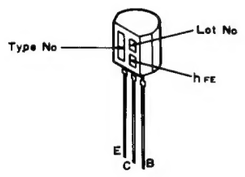

2SA933S
2SC1740S

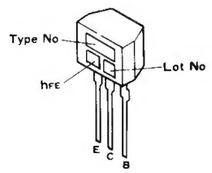

2SC1845

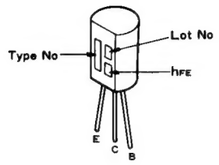

2SA1102

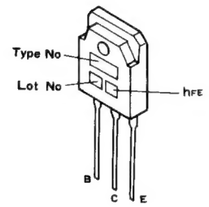

2SC2577

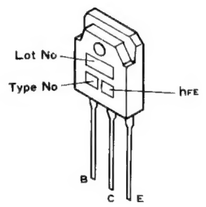

NJM4558DXC

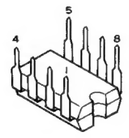

2SA1048
2SC2458

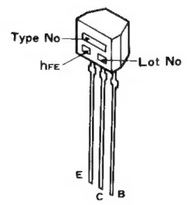

10. ELECTRICAL PARTS LIST

NOTES:

- *When ordering resistors, first convert resistance values into code form as shown in the following examples.*
  Ex. 1 When there are 2 effective digits (any digit apart from 0), such as 560 ohm and 47k ohm (tolerance is shown by J = 5%, and K = 10%).

560Ω	*56 x 10¹*	*561*	*RD¼PS* 5 6 1 *J*
47kΩ	*47 x 10³*	*473*	*RD¼PS* 4 7 3 *J*
0.5Ω	*0R5*	. . . . .	*RN2H* 0 R 5 *K*
1Ω	*010*	. . . . .	*RS1P* 0 1 0 *K*

  Ex. 2 When there are 3 effective digits (such as in high precision metal film resistors).

5.62kΩ	*562 x 10¹*	*5621*	*RN¼SR* 5 6 2 1 *F*

- *The ⚠ mark found on some component parts indicates the importance of the safety factor of the part. Therefore, when replacing, be sure to use parts of identical designation.*
- *For your Parts Stock Control, the fast moving items are indicated with the marks ★★ and ★.*
  ★★ GENERALLY MOVES FASTER THAN ★.
  This classification shall be adjusted by each distributor because it depends on model number , temperature, humidity, etc.

Miscellaneous Parts List

P.C. BOARD ASSEMBLIES

Mark	Symbol & Description	Part No.
	AF Assembly	GWK-254
	Speaker Switch Assembly	no supply
	Power Switch Assembly	no supply
	LED Assembly	no supply
	Headphone Assembly	no supply
	Volume Assembly	no supply

OTHERS

Mark	Symbol & Description		Part No.
⚠ ★	T1	Power transformer (AC220V/240V)	ATS-207
⚠		AC Socket (3P)	AKP-502
⚠ ★★	FU1	Fuse (T1A)	AEK-402
⚠ ★★	FU2	Fuse (2.5A)	AEK-403
⚠		AC Power cord	ADG-068
⚠ ★★	S5	Push switch (POWER)	ASG-551
⚠	C1	Ceramic capacitor	ACG-502

AF Assembly (GWK-254)

SEMICONDUCTORS

Mark	Symbol & Description	Part No.
★★	IC101	NJM4558DXC
★★	Q211, Q212	2SA1102
★★	Q201, Q202, Q215, Q216	2SA1115 (2SA1048) (2SA933S)
★★	Q207, Q208	2SA965 (A)
★★	Q203, Q204	2SC1845
★★	Q209, Q210	2SC2235 (A)
★★	Q301, Q302	2SC2240 (2SC1845) (2SC2389)
★★	Q213, Q214	2SC2577
★★	Q205, Q206, Q303, Q304	2SC2603 (2SC1740S) (2SC2458)
★★	Q305	2SC3332
⚠ ★	D403	RB402
★	D307	RD15EB (HZ15EB)
★	D404, D405	RD16EB (HZ16EB)
★	D201 – D204, D301 – D306 D701	1SS131 1SS131
⚠ ★	D401, D402	11E2 (S5566)

SWITCHES

Mark	Symbol & Description		Part No.
★★	RY301	Relay	ASR-111
★★	S3	Push switch (LOUDNESS)	SULM2SF
★★	S2	Push switch (TAPE2/ ADAPTOR)	SULM4SFC
★★	S1	Push switch (TUNER, TAPE1)	SUL5M6B4B0LFC

COILS

Mark	Symbol & Description	Part No.
	L301, L302	ATH-053

CAPACITORS

Mark	Symbol & Description	Part No.
	C404 (0.01/250V)	ACG-019
	C402, C403 (3300μF/42V)	ACH-249
	C219, C220	CCCSL100D500 (CCDSL100D500)
	C203, C204, C211, C212	CCCSL101J50 (CCDSL101J50)
	C221 – C224	CCCSL101K500 (CCDSL101K500)
	C607, C608	CCCSL220J50 (CCDSL220J50)
	C103, C104, C115, C116	CCCSL221J50 (CCDSL221J50)
	C121, C122, C209, C210	CCCSL470J50 (CCDSL470J50)
	C119, C120	CCCSL560J50 (CCDSL560J50)
	C301, C302	CEANPR47M50
	C201, C202	CEASR33M50
	C309	CEAS010M100
	C601, C602	CEAS010M50
	C308	CEAS101M25
	C205, C206	CEAS101M50
	C101, C102, C113, C114	CEAS2R2M50
	C213, C214	CEAS220M25
	C217, C218	CEAS221M10
	C215, C216	CEAS221M25
	C105, C106	CEAS470M10
	C107, C108, C406, C407, C701	CEAS470M25
	C401, C405	CEAS470M50
	C307	CEAS471M6
	C303 – C306	CQMA104K50
	C605, C606	CQMA122K50
	C609, C610	CQMA124K50
	C109, C110	CQMA222J50
	C611, C612	CQMA333K50
	C117, C118	CQMA473K50
	C603, C604	CQMA562K50
	C111, C112	CQMA822J50

RESISTORS

Note: When ordering resistors, convert the resistance value into code form, and then rewrite the part no. as before.

Mark	Symbol & Description	Part No.
★★	VR102 (BALANCE)	ACT-036
★★	VR201, VR202 (BASS, TREBEL)	ACT-156
	R239, R240 (0.22Ω x 2)	ACN-131
	R704, R707	RD1/2PM182J
⚠	R229, R230, R309 – R312, R402	RD1/4PMF □□□J
	R308	RD1/4PMF101j
	R121, R122, R135, R136, R202, R215, R216, R225 – R228, R401, R701, R703, R705, R706	RD1/4PM □□□J
⚠	R231 – R238	RFA1/4PS151J
	R316, R501, R502	RS1LMF □□□J
	R403, R404	RS2LMF □□□J
	Other resistors	RD1/8PM □□□J

OTHERS

Mark	Symbol & Description	Part No.
	Terminal (PHONO, TUNER, TAPE1, TAPE2)	AKB-095
	Terminal (SPEAKER)	AKE-102
	Mica wafer	AEC-818
	Screw	ABA-258

Speaker Switch Assembly

SWITCH

Mark	Symbol & Description	Part No.
★★	S4 Push switch (SPEAKER A,B)	SUL5LYBXSFC

LED Assembly

SEMICONDUCTORS

Mark	Symbol & Description	Part No.
★	D703 – D705	AEL-451
★	D706	AEL-426
★	D702	RD6.2EB (HZ6.2EB)

Headphone Assembly

RESISTOR

Mark	Symbol & Description	Part No.
	R805, R806	RS1LMF102J

OTHER

Mark	Symbol & Description	Part No.
	Jack (PHONES)	AKN-045

Volume Assembly

RESISTOR

Mark	Symbol & Description	Part No.
★	VR101 (VOLUME)	ACT-199

11. FOR HB, S TYPES

The HB, S types are the same as the HE type with the exception of the following sections.

Contrast of Miscellaneous Parts

Mark	Symbol & Description	Part No. HE type	Part No. HB type	Part No. S type	Remarks
⚠ ★	T1 Power transformer (220V/240V)	ATS-207	ATS-207	.....	
	(110V/120V/220V/240V)	.....	.....	ATS-249	
⚠	AC socket (AC OUTLETS)	AKP-502	AKP-505	AKP-504	
⚠ ★★	S6 Line voltage selector	.....	.....	AKX-504	
⚠ ★★	FU1 Fuse (T1A)	AEK-402	AEK-508	.....	
	(1.6A)	.....	.....	AEK-121	
⚠ ★★	FU2 Fuse (T2.5A)	AEK-403	AEK-512	.....	
	(1.6A)	.....	.....	AEK-121	
	Sheet panel (Black)	ANZ-009	ANZ-009	ANZ-148	
	Sheet panel (Silver)	ANZ-010	ANZ-010	ANZ-010	
	Operating instructions				
	(English)	.....	ARB-695	ARB-695	
	(Spanish)	.....	.....	ARC-099	
	(English/French/German/Italian)	ARE-132	.....	.....	
⚠	AC power cord	ADG-068	ADG-063	ADG-073	
	Screw (3 x 10)	.....	.....	VTZ30P100FZK	

SCHEMATIC DIAGRAM FOR S TYPE

AF ASSEMBLY (GWK-254)

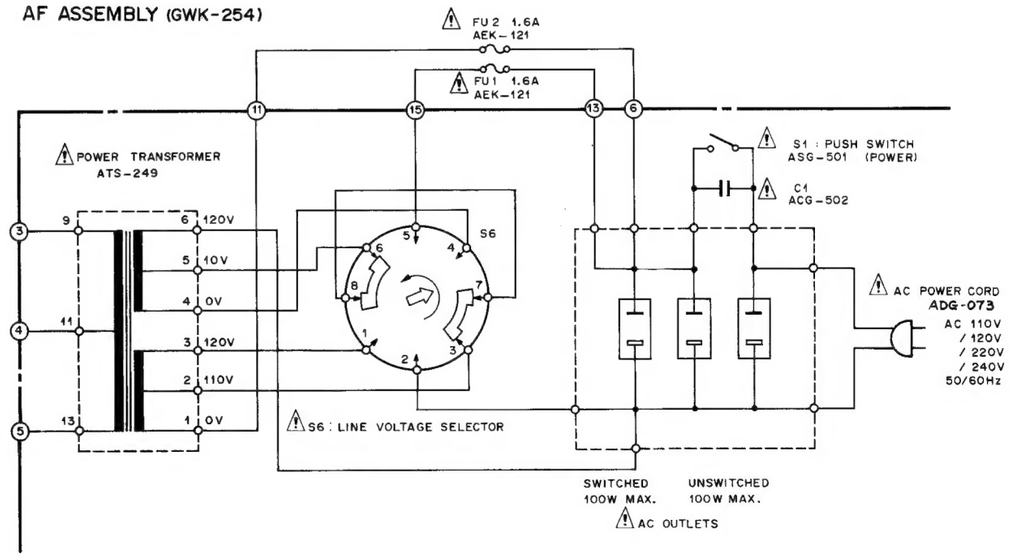

Other ManualsLib Projects

 www.manualslib.com

 www.manualslib.de

 www.manualslib.es

 www.manualslib.fr

 www.manualslib.nl

 www.manualslib.mx

 www.manualslib.tech 30+ Languages